AIR DRIVEN

Gas Boosters & Systems

MAXPRO TECHNOLOGIES

SINGLE ACTING - SINGLE STAGE
PRESSURES UP TO 10,875 psi

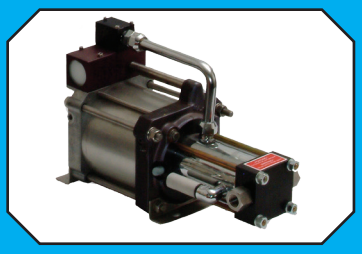

DOUBLE ACTING- SINGLE STAGE
PRESSURES UP TO 21,750 psi

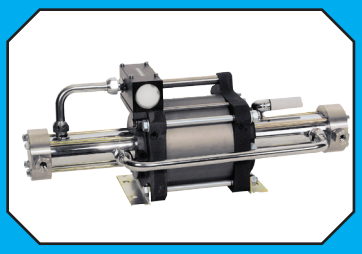

TWO STAGE
PRESSURES UP TO 21,750 psi

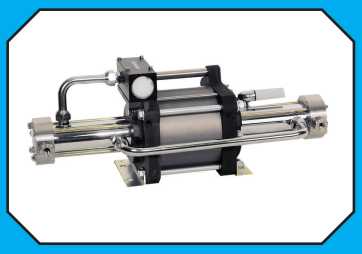

DOUBLE AIR HEAD - SINGLE AND TWO STAGE
PRESSURES UP TO 21,750 and 30,000 psi

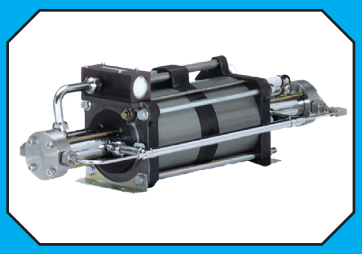

DOUBLE ACTING-TWO STAGE TRIPLE AIR HEAD
PRESSURES UP TO 36,000 psi

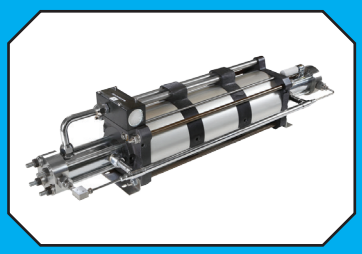

REBREATHER OXYGEN BOOSTERS GAS BOTTLE MOUNTED CHARGING SYSTEMS
PRESSURES UP TO 4,060 psi

MAXPRO CUSTOM DESIGNED
Power Packs, Pump Skids, Portable Test Carts and Test Benches

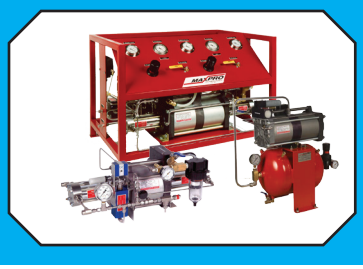

MAXPRO Technologies was founded in 1995 to serve as the exclusive North American distributor for **Maximator®** liquid pumps, gas boosters, air amplifiers and high pressure valves, fittings and tubing.

Our facility is located in Fairview, Pennsylvania. Since its beginning our company has increased both the product lines that we offer and the distribution network that we partner with. The primary goal is servicing our customers and offering the highest quality products available with competitive pricing and fast turnaround.

MAXPRO also provides regional sales and service through our locations in Houston, TX, Corpus Christi, TX and Lafayette, LA, as well as a network of factory trained, independent distributors throughout the US, Canada and Mexico.

Gas Boosters

AIR DRIVEN FROM 30 PSI TO 36,000 PSI

Maximator® gas boosters are an excellent alternative to high pressure stationary type compressors. These boosters offer a compact, lightweight design that requires no electrical power, thereby providing a more flexible and efficient source for delivering high pressure gas.

Maximator® gas boosters will compress gases such as nitrogen and argon up to 36,000 psi, while oxygen can be compressed up to 5,000 psi using special seals and cleaning procedures. A wide variety of other gases can be compressed including hydrogen, natural gas, ethylene, nitrous oxide, neon, carbon dioxide, carbon monoxide and breathing air. Consult MAXPRO for special seals, venting, or cleaning requirements for these gases.

In applications where high output pressures are required and the gas supply pressure is low **Maximator®** gas boosters can be operated in series. MAXPRO supplies these booster combinations in 2, 3 or 4 stage arrangements as complete packages. To achieve higher gas flows, two or more boosters can work in parallel as a unit. Consult MAXPRO for more information on these special applications.

Features

- **Pressures to 36,000 psi for most gases and 5,000 psi for oxygen**
- **Easy to install and operate**
- **Compact, lightweight design**
- **Single or double acting and two stage models**
- **Double air head available in single and two stage boosters**
- **No electrical power required**
- **Requires no high pressure seal lubrication**
- **Boosters are contaminant free**
- **Units can be operated in series or parallel**
- **Variety of pressure and compression ratios available**

ACCESSORIES

Air Pilot Pressure Switches

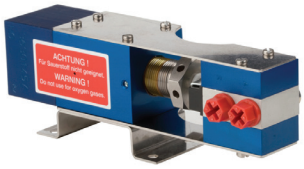

- Air pilot pressure switches are pressure sensing devices with an air valve, used to turn air driven gas boosters, liquid pumps and air amplifiers on/off at a desired set pressure by controlling a pneumatic signal to the unit's air pilot control feature.
- Units can operate at their maximum drive air pressure, achieving desired outlet set pressure as rapidly as possible.
- Switch resets in approximately 10% drop in set pressure, for the controlled unit restart.
- Externally adjustable under pressure
- Normally Open switches close upon reaching set pressure (typically used to stop on pressure increase when the desired high pressure is achieved).
- Normally Closed switches open upon reaching set pressure (typically used to stop unit on pressure decrease, such as low bottle supply pressure).
- Standard materials: aluminum body (316 stainless steel optional), 440B piston, PTFE/Turcon/Buna-N seals, 303 SS gland.

Air Pilot model generator

APS-....-....-....-.....-.....

Switch Position
NO - Normally Open
NC - Normally Closed

Special versions
O2 - Cleaned for oxygen service, 316 stainless steel body
SS - 316 stainless steel body

Connections (Air ports are 1/8" BSPP)
4B - ¼" BSPP with outer seal
4P - ¼" FNPT
4M - ¼" Medium pressure coned and threaded

Pressure Ranges
10-30 - between 10 and 30 bar (145-435 psi)
30-100 - between 30 and 100 bar (435 - 1450 psi)
100-300 - between 100 and 300 bar (1450 - 4350 psi)
150-400 - between 150 and 400 bar (2175-5800 psi)
300-1000 - between 300 and 1000 bar (4350-14,500 psi)

Typically stocked switches
APS-10-30-4P-NO
APS-10-30-4P-NC
APS-30-100-4P-NO
APS-30-100-4P-NC
APS-150-400-4P-NO
APS-150-400-4P-NC
APS-100-300-4P-NO
APS-100-300-4P-NC
APS-300-1000-4P-NO
APS-300-1000-4P-NC
APS-10-30-4B-O2-NC
APS-100-300-4B-O2-NO

Relief Valve MT10RV

- Proportional style relief valve, externally adjustable from 1,000 to 10,000 psi
- 316 stainless steel construction with nylon soft seat and PTFE/EPDM seals
- Connections: Inlet (2) ¼" FNPT, Outlet vent (1) ¼" FNPT
- Orifice at seat is 0.07" diameter
- Gas or liquid service, in-line or clamp mounting
- Typically stock, same day shipment

Air Control Packages

- Engineered package of a filter, regulator, gauge, ball valve, pilot port connection as required and necessary fittings, ready for use on the following products:
  - ACM for all PPO, PP and PPSF pumps and MPLV2 air amplifiers
  - AC for all S pumps
  - ACP for all L, LSF pumps, DLE gas boosters, and DLA and GPLV2 amplifiers
  - ACG for all GX pumps

Gas Receivers

- Maxpro designed Alloy Steel pressure vessel, nickel plated inside and out
- 10,000 psi working pressure rated at room temperature
- Connections are ¼" high pressure coned and threaded at each end
- Single ended closure with Viton seals
  - REC-36S is 36 in^3 volume, 2½" OD x 21" OAL
  - REC-66S is 66 in^3 volume, 2 ½" OD x 33" OAL

STYLE	CATALOG NUMBER	PRESSURE RATIO	COMPRESSION RATIO	SUPPLY PRESSURE (PSI)			
				MIN.*	MIN.**	MAX.	
SINGLE ACTING SINGLE STAGE	DLE2-1	2:1	10:1	0	30	290	
	DLE5-1	5:1	15:1	30	50	725	
	DLE15-1	15:1	20:1	100	110	2,175	
	DLE30-1	30:1	20:1	220	220	4,350	
	DLE75-1	75:1	20:1	500	550	10,875	
DOUBLE ACTING SINGLE STAGE	DLE2	2:1	10:1	0	290	580	
	DLE5	5:1	15:1	30	725	1,450	
	DLE15	15:1	20:1	100	2,175	4,350	
	DLE30	30:1	20:1	220	4,350	8,700	
	DLE75	75:1	20:1	500	10,875	21,750	
DOUBLE ACTING SINGLE STAGE DOUBLE AIR HEAD	DLE2-2	4:1	10:1	0	60	580	
	DLE5-2	10:1	15:1	30	100	1,450	
	DLE15-2	30:1	20:1	145	220	4,350	
	DLE30-2	60:1	20:1	290	440	8,700	
	DLE75-2	150:1	20:1	650	1,100	21,750	
HIGH FLOW DOUBLE ACTING SINGLE STAGE DOUBLE AIR HEAD	8DLE3	3.3:1	15:1	0	100	580	
	8DLE6	6.6:1	15:1	0	50	580	
DOUBLE ACTING TWO STAGE	DLE2-5	5:1	25:1	0	116	0.8xPa	
	DLE5-15	15:1	45:1	30	232	1.6xPa	
	DLE5-30	30:1	90:1	30	75	0.5xPa	
	DLE15-30	30:1	40:1	100	1,088	7.5xPa	
	DLE15-75	75:1	100:1	100	363	2.5xPa	
	DLE30-75	75:1	50:1	220	1,740	12.0xPa	
DOUBLE ACTING TWO STAGE DOUBLE AIR HEAD	DLE2-5-2	10:1	25:1	0	232	1.6xPa	
	DLE5-15-2	30:1	45:1	30	100	3.2xPa	
	DLE5-30-2	60:1	90:1	30	100	1.0xPa	
	DLE15-30-2	60:1	40:1	100	220	15xPa	
	DLE15-75-2	150:1	100:1	100	220	5.0xPa	
	DLE30-75-2	150:1	50:1	220	440	24.0xPa	
	DLE30-75-2-25	150:1	50:1	220	1300	40.0xPa	
	DLE30-75-2-30	150:1	50:1	220	3300	40.0xPa	
DOUBLE ACTING TWO STAGE TRIPLE AIR HEAD	DLE30-75-3-36	225:1	50:1	435	1,350	30.0XPa	

NOTE:

*=Minimum required for basic operation

**= Minimum required to achieve maximum outlet pressure with 145 psi drive air

Pa=Drive air pressure, 145 psi maximum, 15 psi minimum Ps = Gas supply (suction) pressure

The 9/16”-18 is a 1/4” O.D. tubing, high pressure coned and threaded connection

Stall pressure must not be allowed to exceed outlet pressure rating.

Compression ratio is the minimum required ratio of outlet pressure/supply pressure.

Compression ratios and the control of heat generated are especially important on pure oxygen systems. Consult Maxpro for safety considerations.

Adapter (15A4H4P) is available to convert the 9/16”-18 connection to ¼”FNPT. Order separately. Maximum working pressure: 15,000 psi

Contact Maxpro for arrangement and installation drawings.

DIMENSIONS (inches)

OUTLET PRESSURE (PSI) MAX.	STALL PRESSURE	CONNECTIONS		MAX. FREQ. STROKES/MIN.	DISPL PER DOUBLE STROKE (IN.3)	MAX. TEMP. F	WEIGHT (LBS.)
		INLET	OUTLET				
290	2Pa	1	3/4	100	56.2	140	34
725	5Pa	3/8	3/8	110	22.7	140	
2,175	15Pa	1/4	1/4	130	7.4	210	29
4,350	30Pa	1/4	1/4	130	3.6	210	
10,875	75Pa	9/16” - 18	9/16” - 18	130	1.5	210	
580	2Pa+Ps	1	3/4	90	112.5	140	45
1,450	5Pa+Ps	3/8	3/8	110	45.5	140	
4,350	15Pa+Ps	1/4	1/4	120	14.8	210	40
8,700	30Pa+Ps	1/4	1/4	120	7.3	210	
21,750	75Pa+Ps	9/16” - 18	9/16” - 18	120	3.0	210	
580	4Pa+Ps	1	3/4	90	112.5	140	55
1,450	10Pa+Ps	3/8	3/8	100	45.5	140	
4,350	30Pa+Ps	1/4	1/4	100	14.8	210	51
8,700	60Pa+Ps	1/4	1/4	100	7.3	210	
21,750	150Pa+Ps	9/16” - 18	9/16” - 18	100	3.0	210	
580	3.3Pa+Ps	1/2	1/2	80	250	210	121
580	6.6Pa+Ps	1/2	1/2	80	125	210	
1,015	5Pa+2.5Ps	1	3/8	100	56.2	140	45
2,871	15Pa+3Ps	3/8	1/4	110	22.7	210	42
4,785	30Pa+6Ps	3/8	1/4	110	22.7	210	
6,525	30Pa+2Ps	1/4	1/4	120	7.4	210	
12,687	75Pa+5Ps	1/4	9/16” - 18	120	7.4	210	
15,225	75Pa+2.5Ps	1/4	9/16” - 18	120	3.6	210	
1,450	10Pa+2.5Ps	1	3/8	90	56.2	140	55
4,350	30Pa+3Ps	3/8	1/4	100	22.7	210	53
8,700	60Pa+6Ps	3/8	1/4	100	22.7	210	
8,700	60Pa+2Ps	1/4	1/4	100	7.4	210	
21,750	150Pa+5Ps	1/4	9/16” - 18	100	7.4	210	
21,750	150Pa+2.5Ps	1/4	9/16” - 18	100	3.6	210	
25,000	150Pa+2.5Ps	9/16”-18	9/16” - 18	110	3.6	210	56
30,000	150Pa+2.5Ps	9/16”-18	9/16” - 18	110	3.6	210	
36,000	225Pa+2.5Ps	9/16”-18	9/16”-18	110	3.6	210	56

FLOW CHART

AIR DRIVEN FROM 30 PSI TO 36,000 PSI

Pa - Drive air pressure (psi)
PS = Gas supply pressure (psi)
Po = Gas outlet pressure (psi)
F = Gas flow (SCFM)

CATALOG NUMBER	Pa - 90 psi		
	Ps	Po	F
DLE2-1	60	90	6.68
	60	120	5.29
	90	120	7.44
	90	150	4.35
DLE5-1	80	200	3.94
	80	350	2.17
	120	200	5.58
	120	350	3.06
DLE15-1	250	500	4.62
	250	1,000	2.69
	500	500	8.82
	500	1,000	5.26
DLE30-1	500	1,500	3.74
	500	2,500	0.92
	1,000	1,500	7.41
	1,000	2,500	1.77
DLE75-1	750	3,000	2.51
	750	5,000	1.55
	1,500	3,000	5.00
	1,500	5,000	3.08
DLE2	60	120	12.10
	60	200	5.00
	90	150	17.00
	90	250	3.85
DLE5	80	250	7.22
	80	450	2.60
	120	250	11.00
	120	500	3.23
DLE15	250	500	8.50
	250	1,250	4.14
	500	750	16.70
	500	1,500	8.00
DLE30	500	1,000	8.28
	500	3,000	1.08
	1,250	1,500	21.30
	1,250	3,000	11.40
DLE75	750	1,000	5.98
	750	5,000	3.13
	1,500	2,000	11.10
	1,500	6,000	5.68
DLE2-2	80	200	15.5
	80	350	7.3
	120	200	23.9
	120	350	14.1

CATALOG NUMBER	Pa - 90 psi		
	Ps	Po	F
DLE5-2	125	500	9.3
	125	750	5.7
	250	1000	6.3
	500	1250	12.2
DLE15-2	500	1,000	13.80
	500	3,000	1.88
	1,250	1,500	35.50
	1,250	3,000	19.10
DLE30-2	750	1,000	10.90
	750	5,000	3.74
	1,500	2,000	21.30
	1,500	6,000	5.91
DLE75-2	1,000	2,000	5.73
	1,000	10,000	2.95
	1,500	2,000	8.68
	1,500	12,500	2.61
DLE2-5	35	100	5.10
	35	400	3.03
	70	100	8.71
	70	500	4.85
DLE5-15	60	100	3.38
	60	1,000	2.38
	120	250	6.10
	120	1,500	2.07
DLE5-30	30	100	1.98
	30	2,250	0.96
	45	100	2.71
	45	2,500	1.05
DLE15-30	150	250	2.71
	150	2,250	1.51
	220	500	3.86
	220	2,500	1.90
DLE15-75	150	250	2.72
	150	5,000	1.83
	220	500	3.88
	220	6,000	2.16
DLE30-75	250	500	2.18
	250	6,000	0.95
	1,000	1,500	8.40
	1,000	7,500	4.55
DLE2-5-2	60	500	4.2
	60	1000	0.6
	120	750	6.8
	120	1000	4.0

CATALOG NUMBER	Pa - 90 psi		
	Ps	Po	F
DLE5-15-2	150	1000	4.4
	150	2250	2.9
	250	3000	2.7
	500	4000	2.6
DLE5-30-2	60	200	2.04
	60	4,000	1.27
	80	200	2.61
	80	5,000	0.94
DLE15-30-2	250	500	2.43
	250	4,000	1.58
	1,000	1,500	9.35
	1,000	5,000	7.21
DLE15-75-2	250	500	2.43
	250	10,000	1.58
	400	750	3.81
	400	12,500	1.78
DLE30-75-2	500	1,000	2.36
	500	10,000	1.55
	1,500	2,000	6.98
	1,500	15,000	2.58
DLE30-75-2-25	1,750	10,000	7.1
	1,750	15,000	3.9
	3,000	15,000	9.9
	3,000	20,000	2.5
DLE30-75-2-30 Pa - 145 psi	3,500	20,000	14.1
	3,500	30,000	3.5
	5,000	20,000	21.9
	5,000	30,000	14.1
DLE30-75-3-36 Pa - 120 psi	2,320	25,000	4.4
	2,320	30,000	2.1
	3,480	25,000	7.9
	3,480	30,000	5.3
8 DLE 3	100	250	49.2
	100	350	22.6
	200	350	92.2
	200	450	42.4
8 DLE 6	100	250	29.6
	100	450	22.3
	200	450	50.5
	200	550	41.8

Note:
- Drive air pressure operating range is 15-145 psi. Flows above are with 90 psi air drive, unless noted.
- Drive air flow requirements are up to 70 SCFM per air head, and up to 280 SCFM (total) for 8DLE models. Reduced air drive flow will produce lower gas flow.
- Drive air should be filtered to between 5μ and 40μ and have a dew point between 0°F and 50°F.
- Consult Maxpro for performance values on specific application parameters.

Gas Booster Systems

MAXPRO gas booster systems provide a compact, portable source for increasing gas pressures. These air driven booster systems are shipped assembled and fully tested, ready for turn-key installation. As with standard boosters, the gas booster systems require no electrical power, providing safe and economical operation.

Gas booster systems are capable of compressing most gases including nitrogen, argon, helium and hydrogen up to 36,000 psi. Systems feature special seals and cleaning can pressurize oxygen to 5,000 psi. All MAXPRO systems for use with hazardous gases are modified to ensure vent ports are piped to a common vent connection.

SYSTEM CATALOG NUMBER			GAS BOOSTER TYPE	SYSTEM RATING (PSI)	MINIMUM SUCTION PRESSURE	DIMENSIONS DP X HG X LG	WEIGHT
INERT GAS	HAZARDOUS GAS	OXYGEN GAS					
MTIG3-30	MTHG3-30	MTO2-3-30	DLE30	3,000	220	16" X 23" X 28"	120
MTIG3-5-30	MTHG3-5-30	MTO2-3-5-30	DLE5-30	3,000	30	16" X 23" X 28"	120
MTIG5-75	MTHG5-75	MTO2-5-75	DLE75	5,000	500	16" X 23" X 28"	120
MTIG5-15-75	MTHG5-15-75	MTO2-5-15-75	DLE15-75	5,000	100	16" X 23" X 28"	120
MTIG10-75-2	MTHG10-75-2	N/A	DLE75-2	10,000	650	16" X 23" X 38"	150
MTIG10-30-75-2	MTHG10-30-75-2	N/A	DLE30-75-2	10,000	220	16" X 23" X 38"	150
MTIG15-30-75-2	N/A	N/A	DLE30-75-2	15,000	220	16" X 23" X 38"	150

NOTE:
1. Various other gas booster models can be used to best fit your specific application.
2. Schematic shown is the standard system. Other options may be added or removed as required.
3. The hazardous gas systems have all vent ports plumbed to a common discharge port. This port must be plumbed to a safe vent area.
4. The oxygen systems have all components cleaned for oxygen service.
5. For higher flow rates and/or multiple stages, more than one booster may be used in the system.
6. Compression ratios and the control of heat generated are especially important on pure oxygen systems. Consult Maxpro for safety considerations.

Applications

- **Leak testing of pressure components**
- **Low pressure gas reclaim from storage bottles**
- **Gas charging accumulators**
- **Pressurizing gas cylinders and shock absorbers**
- **Breathing air systems for scuba and fire department SCBA tanks**
- **Boosting gas pressures from nitrogen and oxygen generators**
- **Gas assist injection molding**
- **Boosting gas pressures from vaporized liquid source**

Flow Schematic

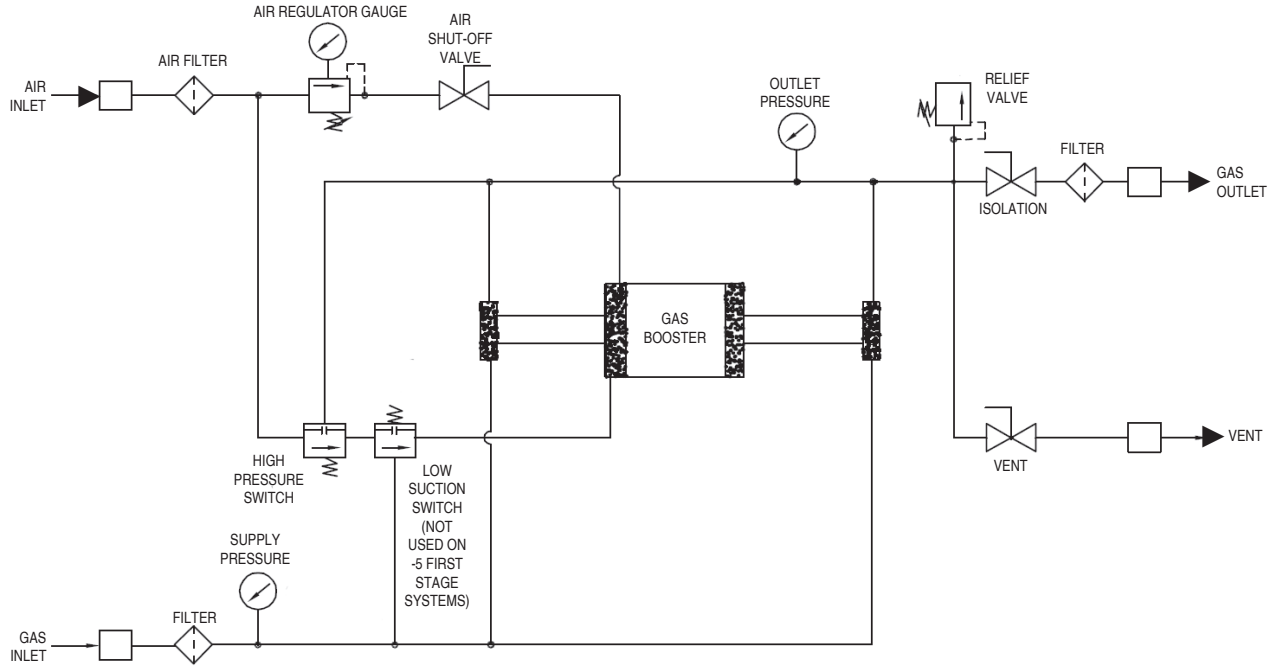

Oxygen Gas Booster Systems

Small, lightweight and economical, MAXPRO oxygen gas booster packages are ideal for aircraft and bottle filling applications. Requires only an air source for power (70 psi minimum) and an oxygen supply bottle that can be used to as low as 100 psi. These booster packages will achieve up to 2,000 psi outlet pressure. Single and double acting boosters are available to meet flow requirements.

Features

- All stainless steel components, cleaned for oxygen service
- Contaminant free operation with complete separation and isolation between the oxygen and air drive sections
- No electrical power required, only a 70 psi shop air source
- Automatic shut-off at desired outlet pressure for unattended operation
- Safety relief devices and pressure gauges included on both gas and air sides
- Manual vent valve for venting gas pressure prior to disconnecting outlet line
- Drive air filter and shut-off ball valve to manually stop booster
- Drive air connection is 1/2" FNPT
- Oxygen gas inlet and outlet connections are 1/4" FNPT
- All components are mounted to the booster and tested prior to shipment
- Compression ratios and the control of heat generated are especially important on pure oxygen systems. Consult Maxpro for safety considerations.

SINGLE ACTING OXYGEN BOOSTER PACKAGE

MTO2-2-DLE30-1

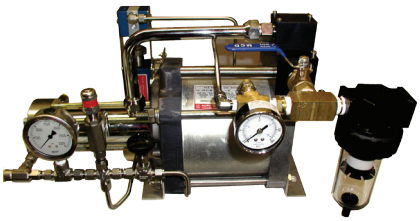

FLOW SCHEMATIC

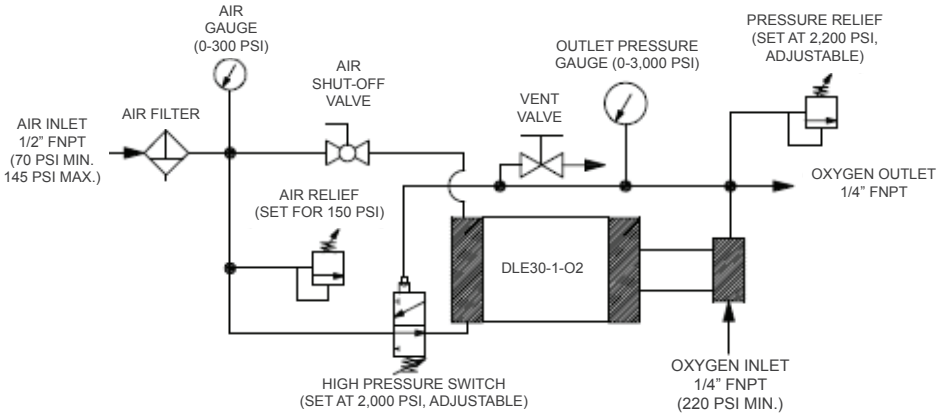

This package is 21" LG x 15" HG and weighs approximately 44 lbs.

DOUBLE ACTING OXYGEN BOOSTER PACKAGE - FOR HIGHER FLOW RATES

MTO2-2-DLE30

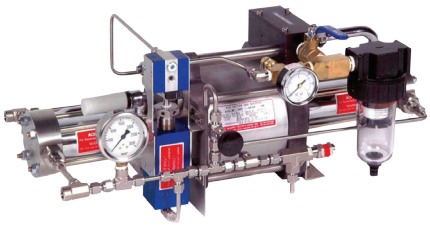

FLOW SCHEMATIC

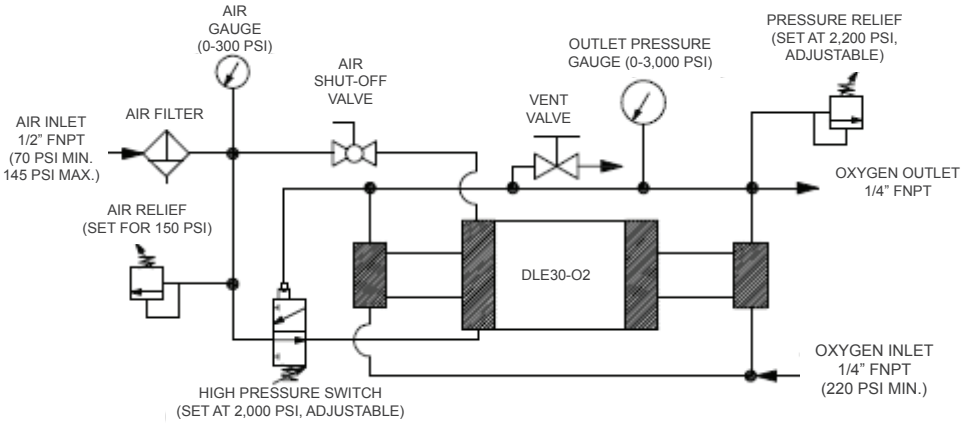

This package is 25" LG x 10" HG and weighs approximately 54 lbs.

ROB22 (-HL) Rebreather Oxygen Booster

The Maximator® ROB rebreather oxygen booster is specifically designed for use in the sport diving field. This compact compressed air or hand driven oxygen booster provides a rugged and reliable means of recharging rebreather size tanks. The ROB Oxygen Booster is also available as a portable package stored in a sturdy plastic waterproof case. Compression ratios and the control of heat generated are especially important on pure oxygen systems. Consult Maxpro for safety considerations.

ROB boosters:

- **Are lightweight and portable**
- **Ideal for installing in a Pelican Case**
- **Finned Gas Barrel for efficient gas cooling**
- **Oxygen Cleaned**
- **Can be driven from either compressed air or from bottle supply**

Wetted materials of construction:

Seal package: Filled Teflon (PTFE) Viton

- Pump Body: 316L SS
- Piston: 440 SS
- Fittings: 316 SS

Approximate Dimensions:

- Height: 8 ”
- Depth: 4 ½”
- Width: 4 ½”
- Side inlet/outlet: Standard

Optional Accessory:

- ACP - Air control package consisting of a filter, regulator with gauge, shut-off valve and required fittings.
- Optional hand lever operation: HL

Technical Data:	
Air drive pressure:	14.5 - 145 psi
Maximum Outlet Pressure at air drive of 145 psi:	4,060 psi
Pressure Ratio:	1:28
Displacement per cycle:	0.28 (In³)
Connections:	
Inlet:	¼” NPT
Outlet:	¼” NPT
Air Drive:	¼” NPT
Maximum operating temperature:	140° F
Net Weight:	9 lbs.
Maximum operating temperature:	140° F / 60° C

Nitrogen Gas Booster Systems

MAXPRO nitrogen gas booster packages offer an economical method of boosting nitrogen (or other select gases or air) gas pressure up to 4,400 psi. The package features a compact and lightweight arrangement that is turn-key and fully tested. No electrical power required, only a 75 psi shop air source is needed. Single and double acting boosters are available to meet flow rate requirements.

Applications

- **"Pop Floats" or tire filling**
- **Pressurizing shock struts**
- **Charging hydraulic accumulators**
- **Gas reclaim from bottles**
- **Boosting pressures from nitrogen generators**
- **Boosting pressures from vaporized liquid nitrogen**

Features

- **Shop air driven units shown below.**
- **For high pressure nitrogen driven option add -DASR to model number**
- **Nitrogen drive units include a high pressure regulator with gauge, a gas supply pressure switch to stop booster when supply bottle pressure is too low, and a dry air spool modification on the booster for longer service life. These units can also be driven on shop air pressures.**
- **All packages include:**
  - **contaminant free operation with complete separation and isolation between the gas and air drive sections**
  - **automatic shut-off at desired outlet pressure for unattended operation**
  - **safety relief valves and gauges on gas and air/nitrogen sides**
  - **drive air/nitrogen shut-off ball valve to manually stop booster**
  - **manual vent valve for venting gas pressure prior to disconnecting outlet line**

SINGLE ACTING NITROGEN BOOSTER PACKAGES

MTNB3-DLE30-1 - to 2,200 psi
MTNB4-DLE75-1 - to 4,400 psi

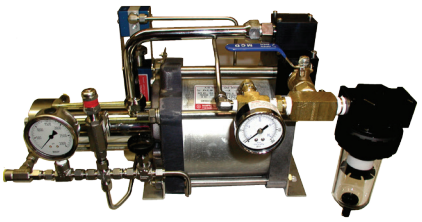

Air drive unit shown. Nitrogen drive unit available.

This package is 21" LG x 15" HG and weighs approximately 44 lbs.

FLOW SCHEMATIC

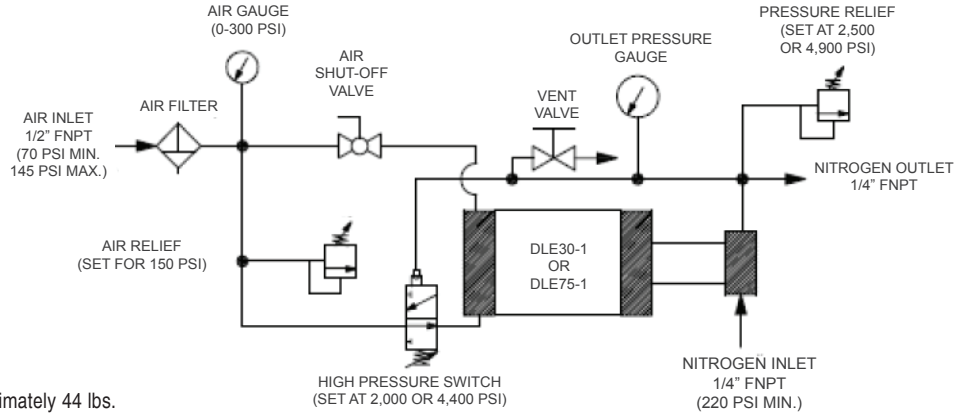

DOUBLE ACTING NITROGEN BOOSTER PACKAGES - FOR HIGHER FLOW RATES

MTNB3-DLE30 - to 2,200 psi
MTNB4-DLE75 - to 4,400 psi

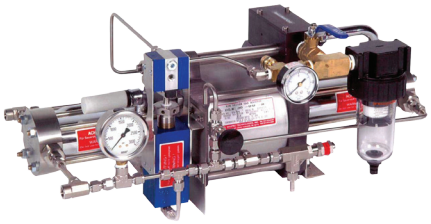

Air drive unit shown. Nitrogen drive unit available.

This package is 25" LG x 10" HG and weighs approximately 54 lbs.

FLOW SCHEMATIC

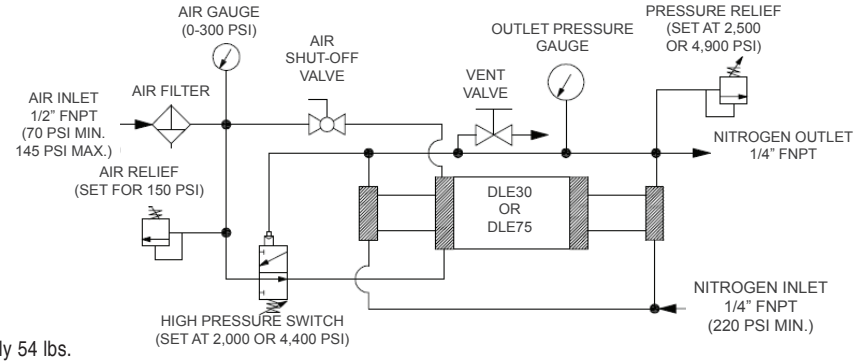

Gas Bottle Mounted Charging System

Engineered to provide compact and portable high pressure gas solutions

MTBGN4-DLE30-1 FOR NITROGEN SERVICE
MTBGO4-DLE30-1 FOR OXYGEN SERVICE

Features:

- Low cost, fast shipment, ready to use
- CGA connection and hose included
- Gas inlet pressure to 3,000 psig
- Gas outlet pressure to 4,350 psig
- Adjustable 1,450-4,350 psig automatic shut-off switch
- Completely portable nitrogen driven nitrogen gas booster
- Oxygen system requires air or nitrogen drive gas
- Compression ratios and the control of heat generated are especially important on pure oxygen systems. Consult Maxpro for safety considerations.

Suitable for industrial gas charging applications

Bottle and Bottle Cart not included

Benefits:

- Easy to connect and operate
- Compact construction style
- Lightweight and easy to transport
- No risk from heat, flame or spark
- One source drives and feeds the booster station

GAS BOTTLE MOUNTED BOOSTER PERFORMANCE EXAMPLE:

Booster drive pressure: 140 psig
Vessel volume: 218 cubic inches
Vessel start pressure = 800 ps

Gas Supply Pressure	Vessel Final Pressure	Maxpro time to fill	Brand "H" time to fill
1500	2000	0:20	0:53
1250	2000	0:35	1:41
1000	2000	0:58	3:25
800	1300	0:35	4:20

OTHER PRODUCTS

Valves, Fittings & Tubing

- Highest quality for superior product performance
- Standard metals of stainless steel
- Pressures to 152,000 PSI

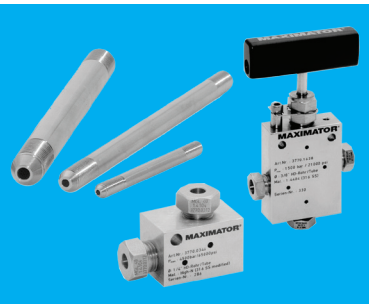

Air Amplifiers & Systems

- Air driven to 4,350 PSI
- Deliver increased air pressure to shop floor equipment and work stations
- Require no electrical power
- Single or double acting models

Liquid Pumps & Systems

- Air driven to 60,000 PSI
- Economic hydraulic power
- Interchangeable with other leading pumps
- Require no electrical power
- Variety of sizes and styles to suit your application

Repair Service Available

- Guaranteed quality workmanship
- Cost effective quick turnaround
- Use original manufacture parts
- Factory support

MAXPRO TECHNOLOGIES

7728 Klier Drive South • Fairview, PA 16415
Phone: 814-474-9191 • Fax: 814-474-9391
Website: www.maxprotech.com
Email: sales@maxprotech.com

MT R9 12 15

All technical and dimensional information subject to change.

All general terms and conditions of sale, including limitations of our liability, apply to all products and services sold.

Visit our website at **www.MaxProTech.com** to view our Terms and Conditions.